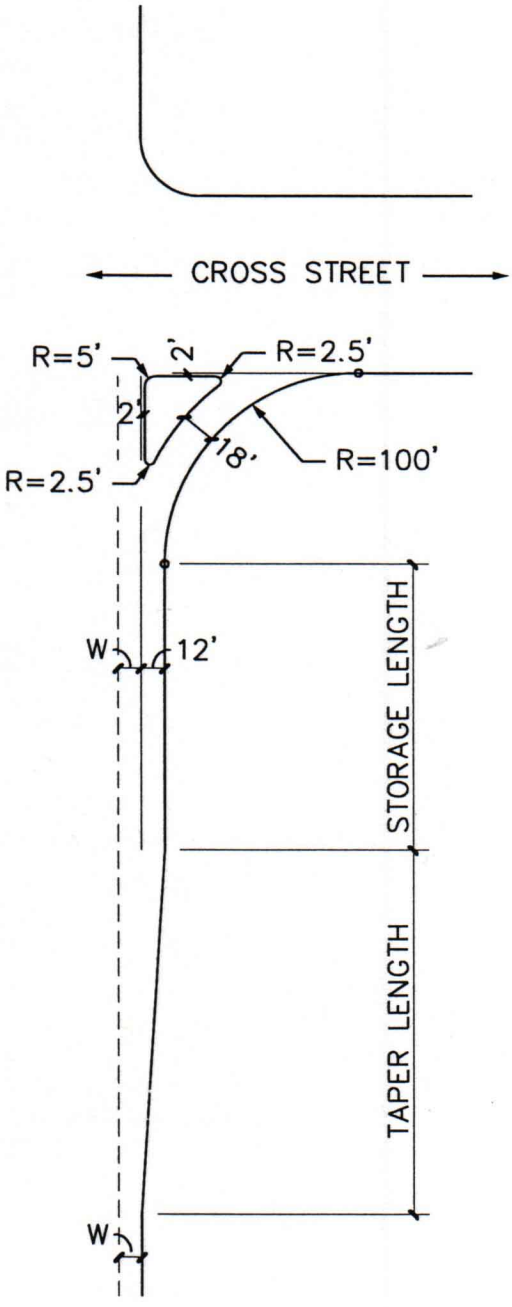

NOTES:

1. ONLY THOROUGHFARES AND COLLECTORS MAY UTILIZE UNCHANNELIZED RIGHT TURN LANES.
2. THE NUMBER OF ADJACENT LANES VARIES WITH STREET CLASSIFICATION.
3. MINIMUM REQUIRED STORAGE LENGTH IS BASED ON CROSS STREET CLASSIFICATION.

CROSS STREET	MIN. STORAGE LENGTH
THOROUGHFARE:	
PRINCIPAL	200'
MAJOR	150'
MINOR	150'
COLLECTOR	100'
LOCAL	60'

DESIGN SPEED	MIN. TAPER LENGTH
50	230'
55	250'
60	270'
70	300'

CITY OF DECATUR

PAVING CONSTRUCTION DETAILS

RIGHT TURN LANE WITH CHANNELIZATION

REVISED MAR 2000

SCALE: 1" = 100'

SHEET: P-15