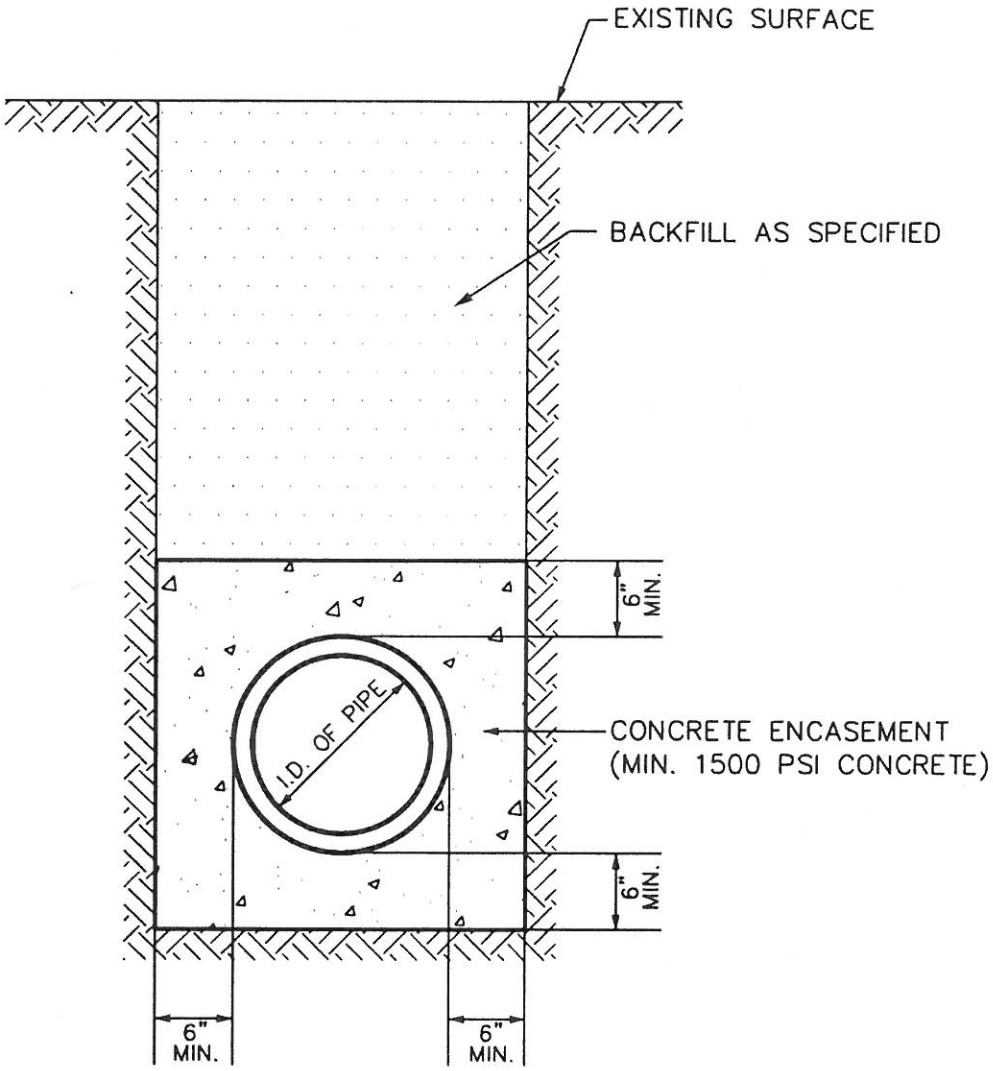

CITY OF DECATUR	SEWER SYSTEM CONSTRUCTION DETAILS CONCRETE ENCASEMENT	REVISED MAR 2000 SCALE: N.T.S. SHEET: S-10